BlinkieCity

LEDECA®
ALWAYSBRIGHT

LEDECA®

digital **DOOH** home

out of

PLUG&PLAY SOLUTIONS

www.ledeca.com

ADVANTAGES

Features

- Housing color can be customized
- With total weight about 15kg per unit, high durable
- High brightness, >4500cd/m^2 brightness
- Low power consumption
- Passed Vibration & Shock tests
- Integrated GPS
- Supports location based content management
- Integrated Wifi & Bluetooth (optional)
- Optional sensors (air pollution, vibration, temperature, noise, etc..)

Apron Teknoloji AS. reserves the right to change any product specification, discontinue of any product or services without prior notice

DIMENSIONS

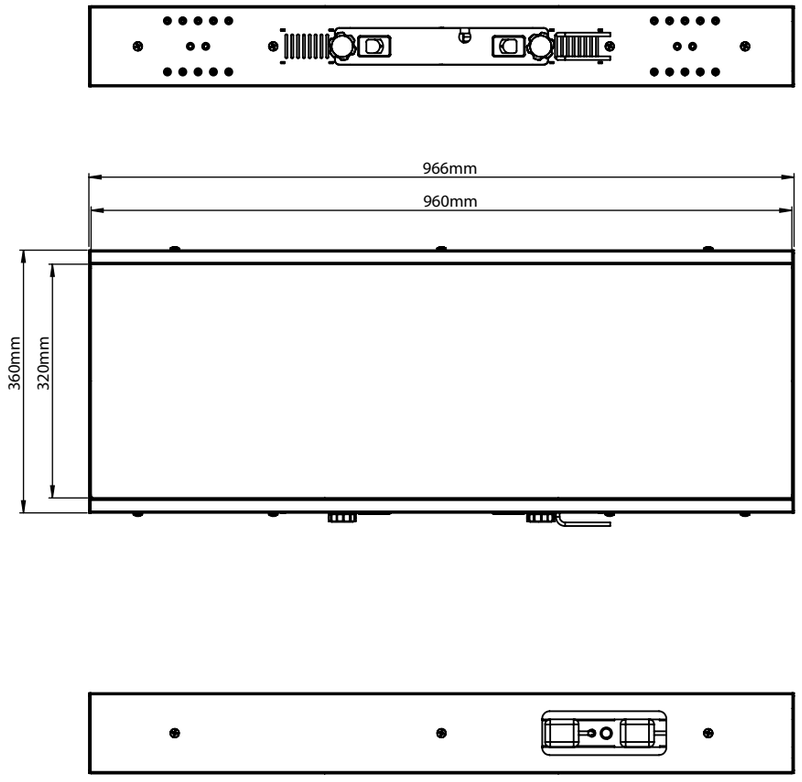

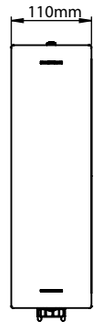

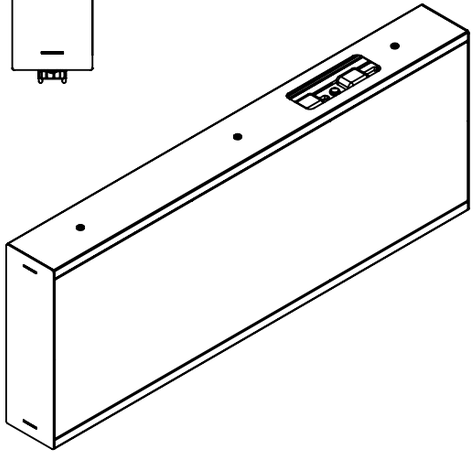

LEDECA
www.ledeca.com

Apron Teknoloji AS. reserves the right to change any product specification, discontinue of any product or services without prior notice

TECHNICAL SPECIFICATIONS

	COMPACT
	LDCOSP03.0CL
General	
Operating environment	outdoor
Pixel pitch	3mm
Service type	rear access
Calibrated brightness (nits)	4.500nits
Lamp type	SMD
Lifespan (hours at %50 brightness)	>100.000hours
White color calibration (adj.)	3.500K~8.500K
Gray scale	>16bits
Brightness control	256 level
Module Specifications	
Module dimensions (mm)	320x160
Refresh frequency	adjustable
Module resolution	104x52px
LED drive method	dynamic
Module material	plastic (PC)
Module type	apparent
PCB type	multilayer
PCB surface coating	humiseal
Panel Specifications	
Panel material	galvanized steel sheet/aluminum
Panel paint	ES powder coated
Panel dimensions (mm)	960x320
IP level	IP65
Panel weight	24kg
Panel resolution	312x104px
Pixel density (pcs/sqm)	105.625
Viewing angle (horizontal x vertical)	>120°x120°
Minimum viewing distance	>3m
Operating temperature range	-20°C ~ +45°C
Storage temperature range	-40°C ~ +60°C
Operating humidity	10% ~ 90% non-condensing
Power input voltage	10~32 VDC
Power input frequency	-
Average power per panel	<120W
Max power per panel	<500W
Active PFC	YES
Load tolerance	25% min.
Panel installation type	Fixed installation
Cooling	Natural
Other	
Max input resolution	512x384px
Standard video formats	All digital formats
Brightness adjustment	Automatic & manual
Death pixel monitoring	Optional
Module monitoring	Optional
Temperature monitoring	YES
Smoke monitoring	Optional
Voltage monitoring	YES
Power redundancy	N/A
Signal path backup	YES
Signal transmission	5G
Standby scheduling	YES
Power on/off scheduling	Optional
Power saving mode	YES
Certification	CE-EMC, CE-LVD, RoHS,FCC
Options	
*The mechanical and electronic specification options are available.	

Apron Teknoloji AS. reserves the right to change any product specification, discontinue of any product or services without prior notice

LEDECA
ALWAYSBRIGHT

SCAN for more

BLINKIECITY BROCHURE

APRON TEKNOLOJİ A.Ş. | LEDECA GmbH | ALTUM ALTUM BİLGİ VE İLETİŞİM TEKNOLOJİLERİ A.Ş. | ORKU METAL A.Ş.